1941-48 STUDEBAKER ALL TRUCKS

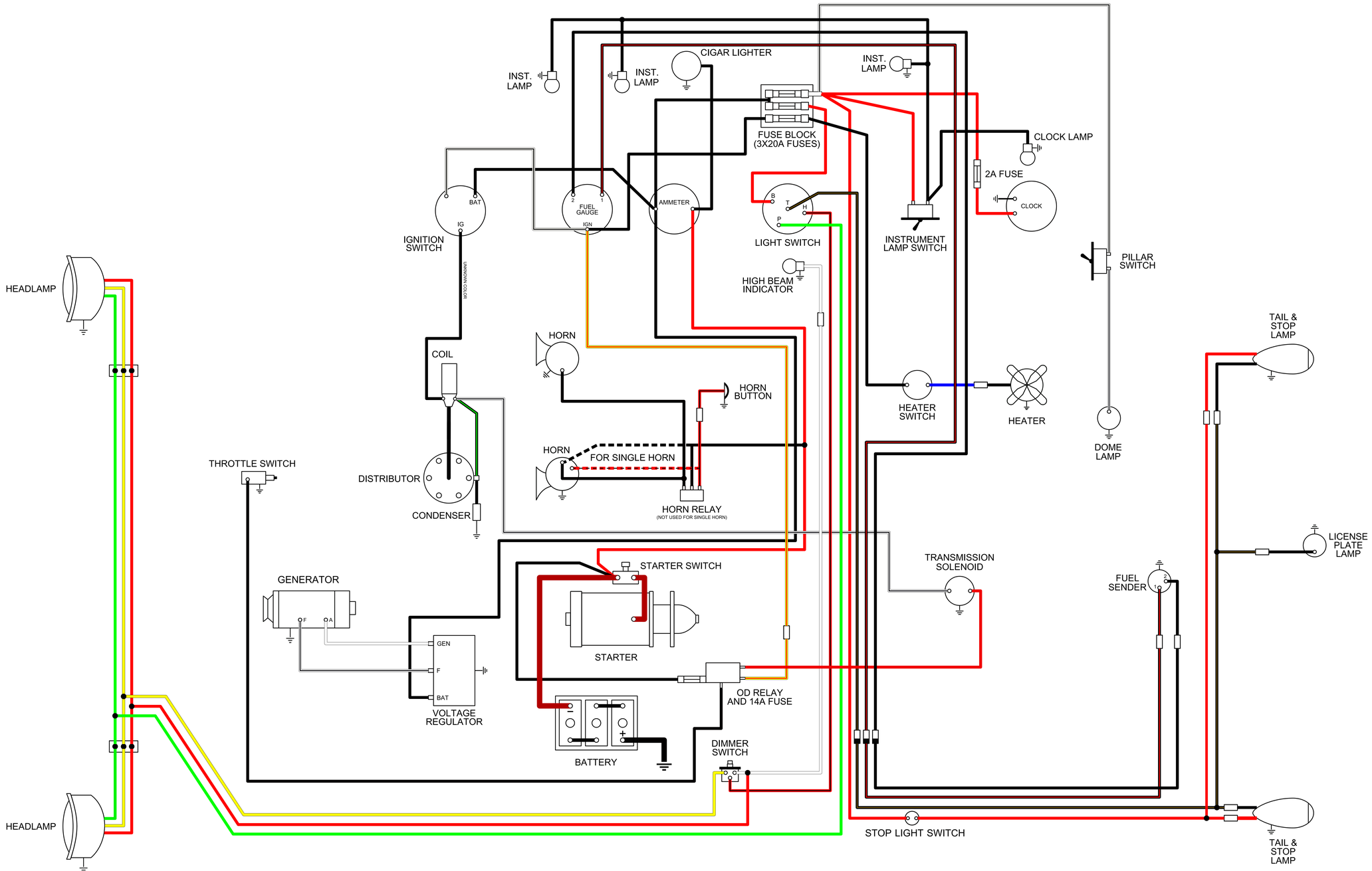

- BLACK
- WHITE
- RED
- BLUE
- GREEN
- LIGHT GREEN
- YELLOW
- TAN
- GRAY
- RED & BLACK
- RED & WHITE
- BLACK & WHITE
- BLACK & GREEN
- BLACK & BROWN
- BLACK & RED
- WHITE & BLACK
- WHITE & RED
- WHITE & GREEN
- WHITE & BROWN
- YELLOW & RED
- GREEN & BLACK

- CONNECTOR AS PART OF HARNESS
- LOOSE CONNECTOR
- FUSE
- GROUND CONNECTION
- RESISTOR

CINCO

1941-48 STUDEBAKER ALL TRUCKS

MAIN POWER

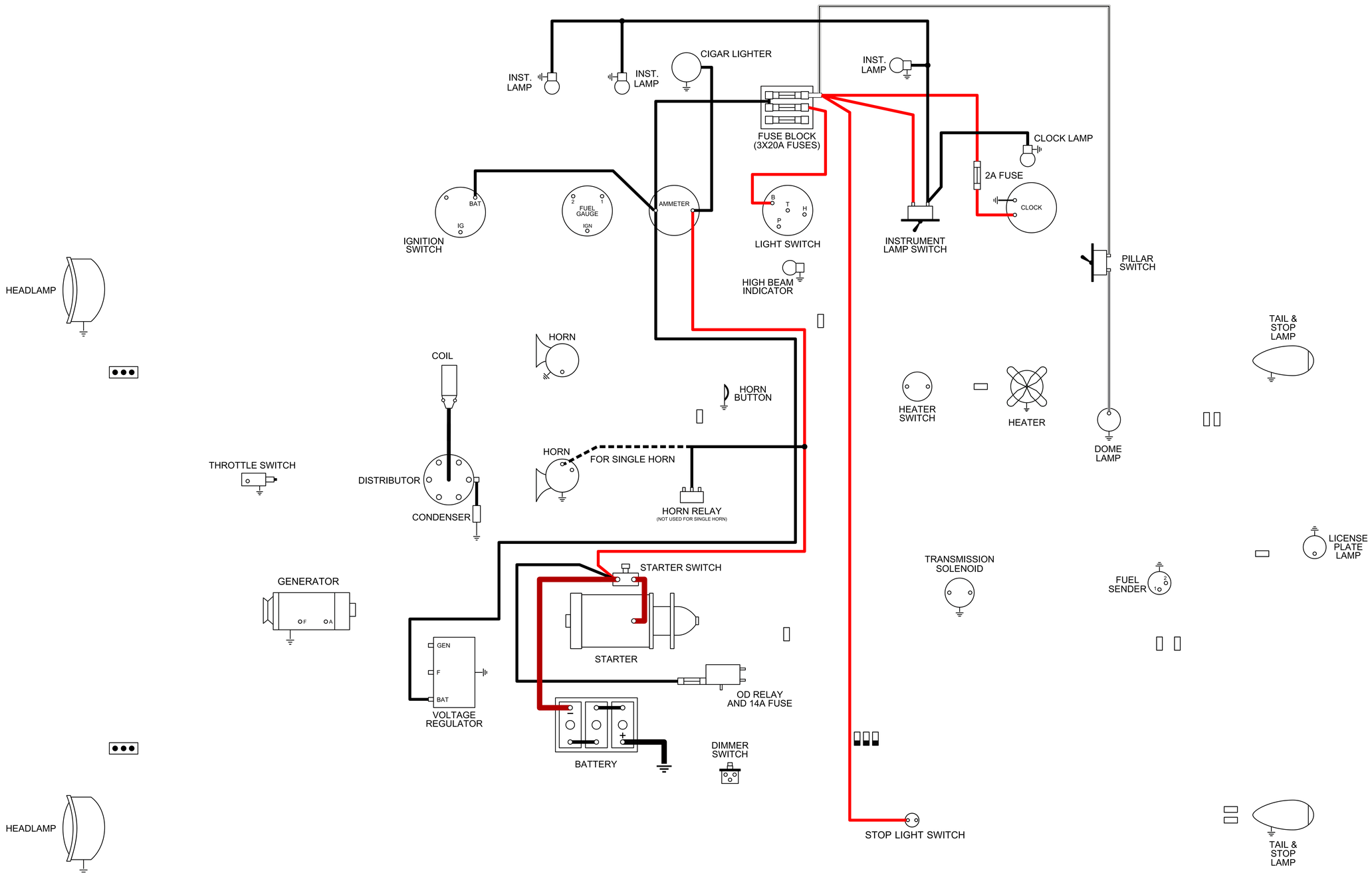

- BLACK
- WHITE
- RED
- BLUE
- GREEN
- LIGHT GREEN
- YELLOW
- TAN
- GRAY
- RED & BLACK
- RED & WHITE
- BLACK & WHITE
- BLACK & GREEN
- BLACK & BROWN
- BLACK & RED
- WHITE & BLACK
- WHITE & RED
- WHITE & GREEN
- WHITE & BROWN
- YELLOW & RED
- GREEN & BLACK

- CONNECTOR AS PART OF HARNESS
- LOOSE CONNECTOR
- FUSE
- GROUND CONNECTION
- RESISTOR

CINCO

1941-48 STUDEBAKER ALL TRUCKS

IGNITION SYSTEM

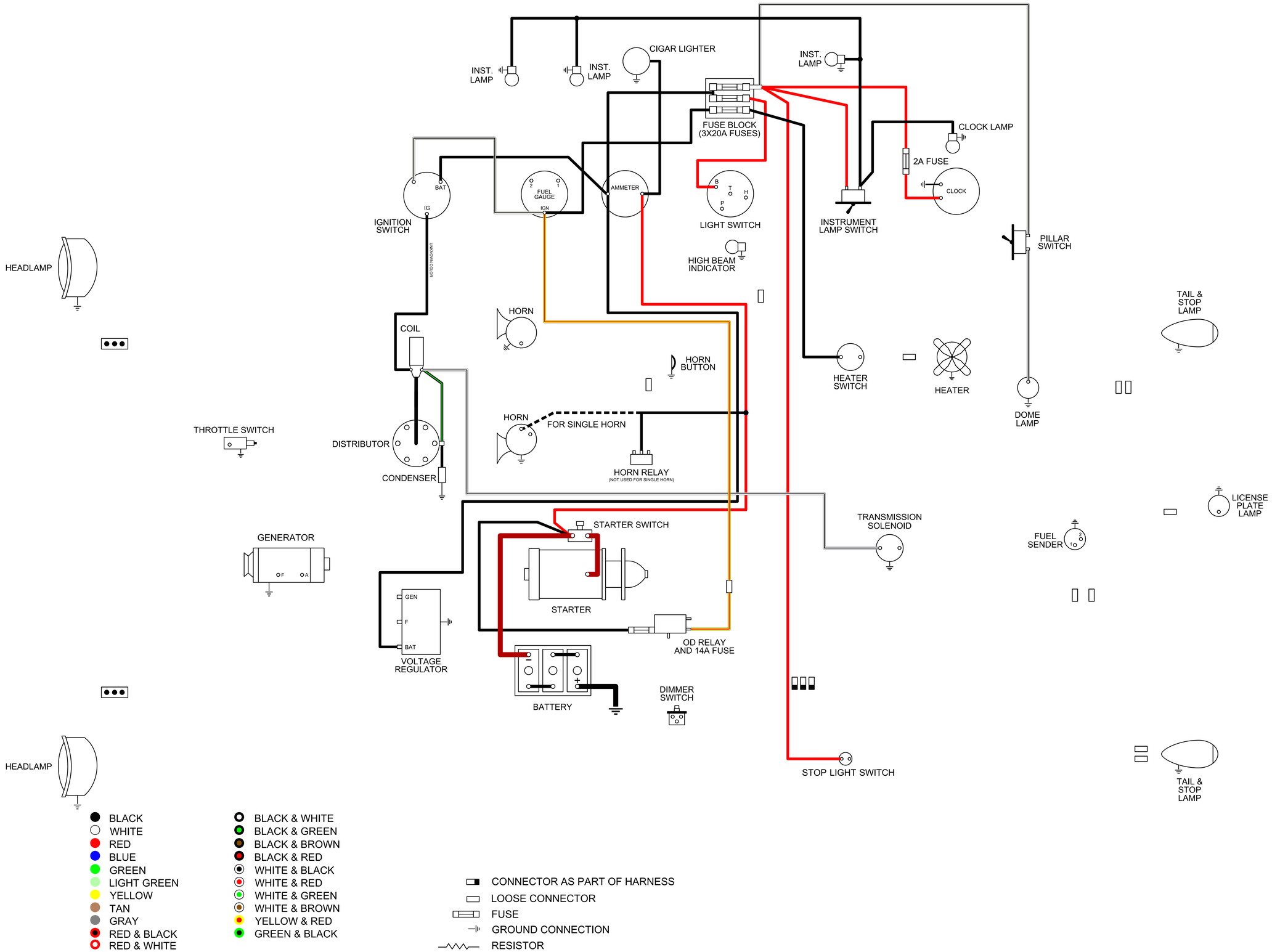

CINCO

1941-48 STUDEBAKER ALL TRUCKS

CHARGING SYSTEM

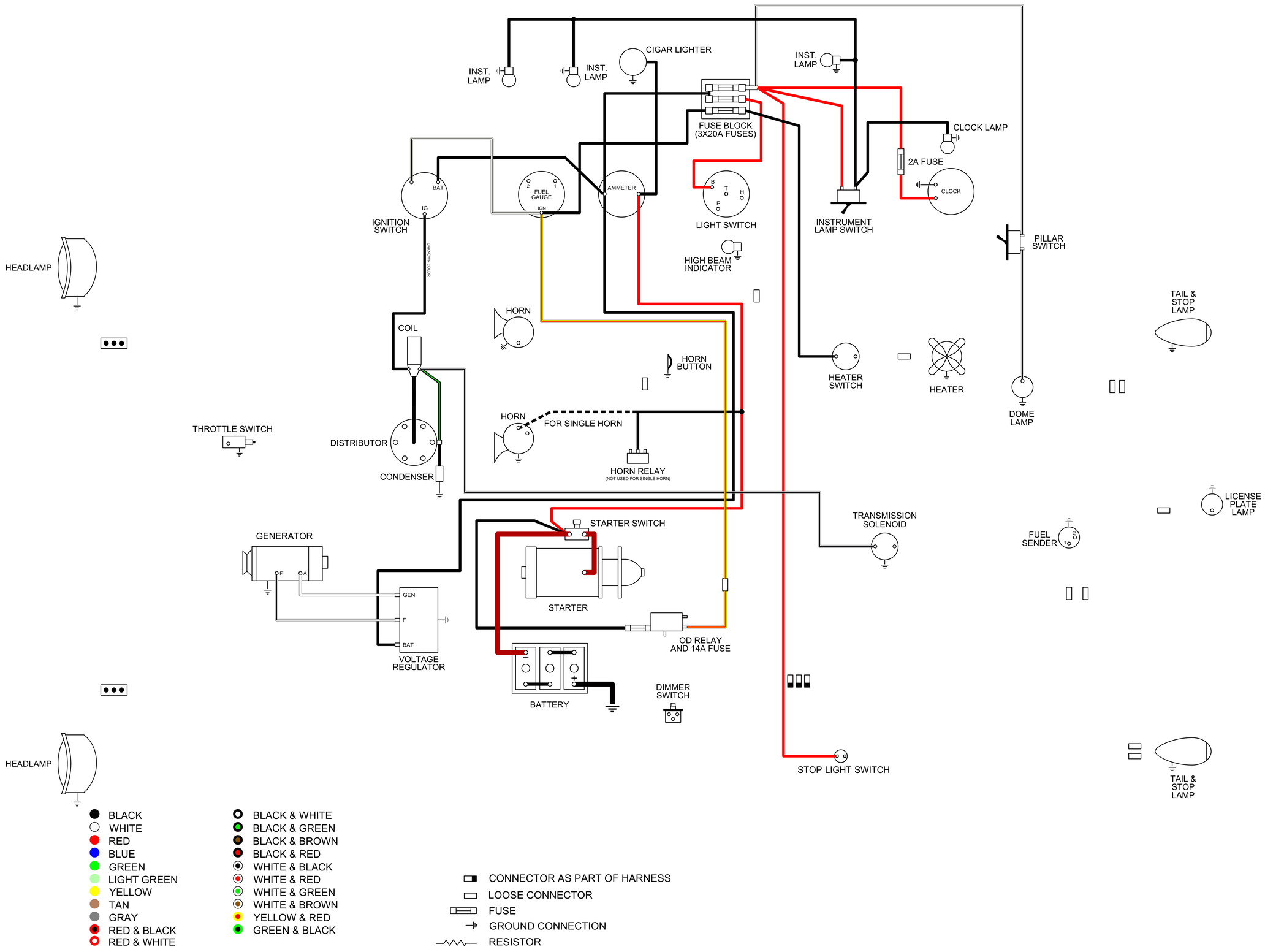

CINCO

1941-48 STUDEBAKER ALL TRUCKS

HEADLIGHTS

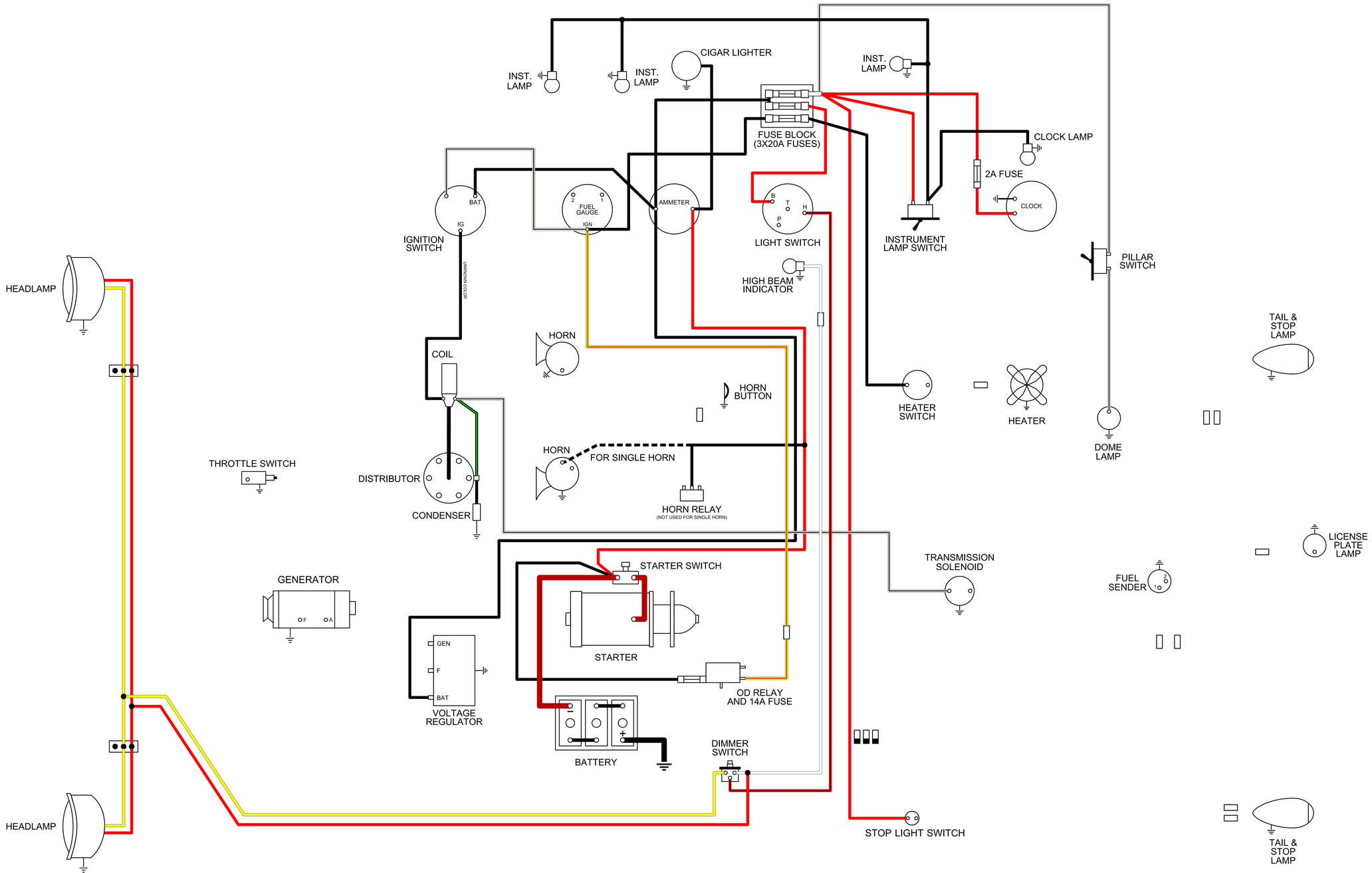

- BLACK
- WHITE
- RED
- BLUE
- GREEN
- LIGHT GREEN
- YELLOW
- TAN
- GRAY
- RED & BLACK
- RED & WHITE
- BLACK & WHITE
- BLACK & GREEN
- BLACK & BROWN
- BLACK & RED
- WHITE & BLACK
- WHITE & RED
- WHITE & GREEN
- WHITE & BROWN
- YELLOW & RED
- GREEN & BLACK

- CONNECTOR AS PART OF HARNESS
- LOOSE CONNECTOR
- FUSE
- GROUND CONNECTION
- RESISTOR

CINCO

1941-48 STUDEBAKER ALL TRUCKS

RUNNING LIGHTS

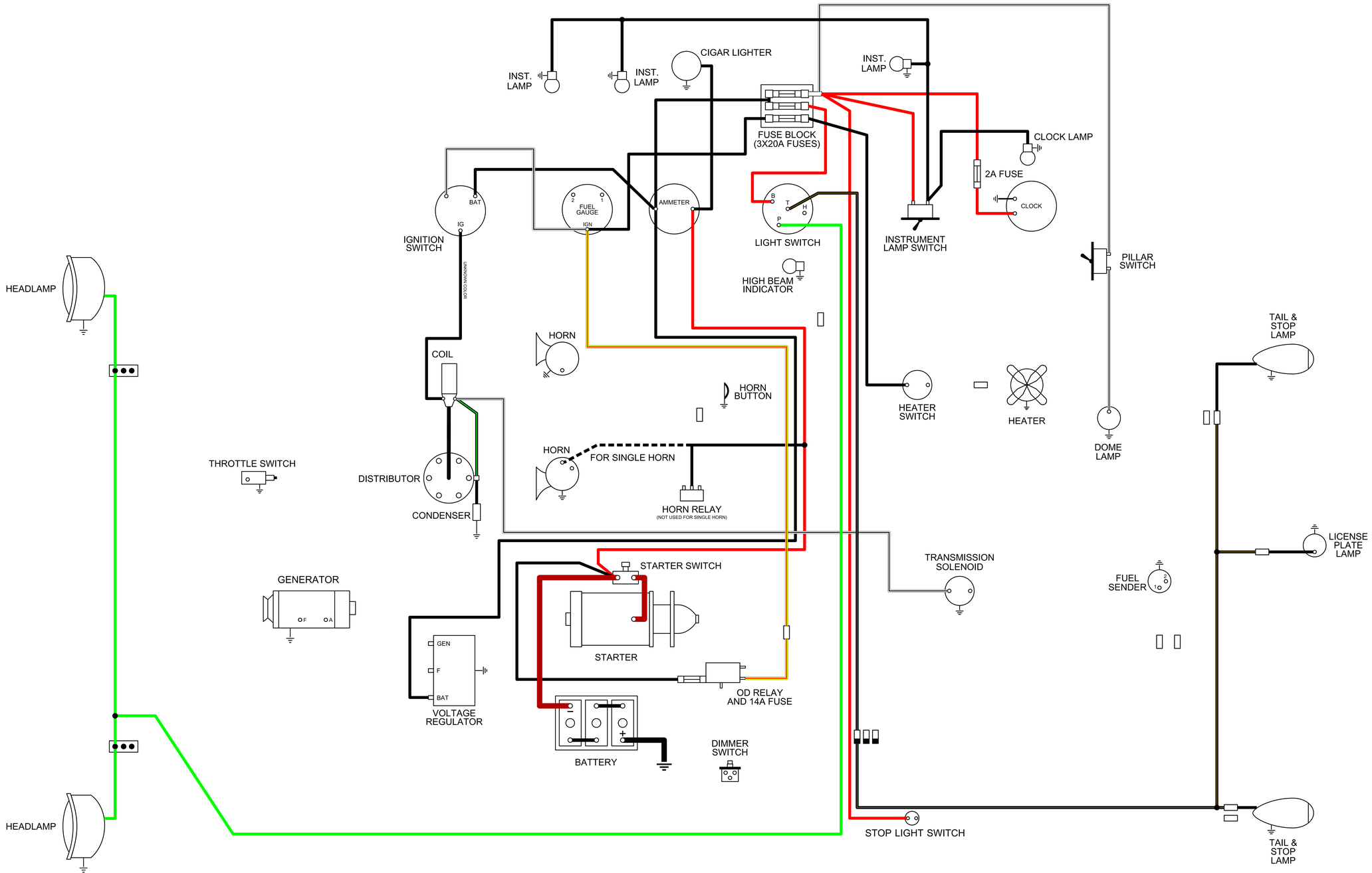

- BLACK
- WHITE
- RED
- BLUE
- GREEN
- LIGHT GREEN
- YELLOW
- TAN
- GRAY
- RED & BLACK
- RED & WHITE
- BLACK & WHITE
- BLACK & GREEN
- BLACK & BROWN
- BLACK & RED
- WHITE & BLACK
- WHITE & RED
- WHITE & GREEN
- WHITE & BROWN
- YELLOW & RED
- GREEN & BLACK

- CONNECTOR AS PART OF HARNESS
- LOOSE CONNECTOR
- FUSE
- GROUND CONNECTION
- RESISTOR

CINCO

1941-48 STUDEBAKER ALL TRUCKS

BRAKE LIGHTS

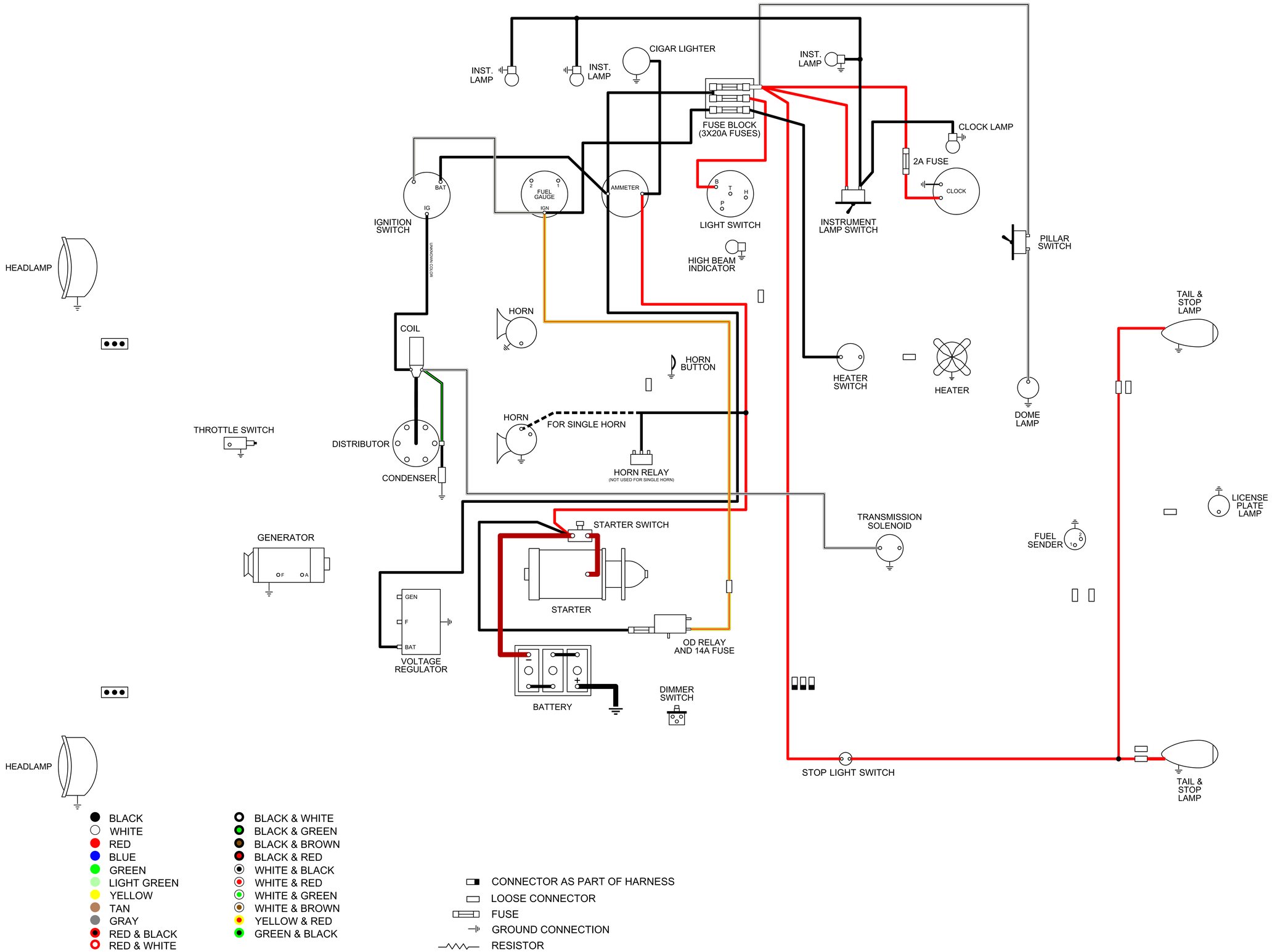

CINCO

1941-48 STUDEBAKER ALL TRUCKS
HEATER

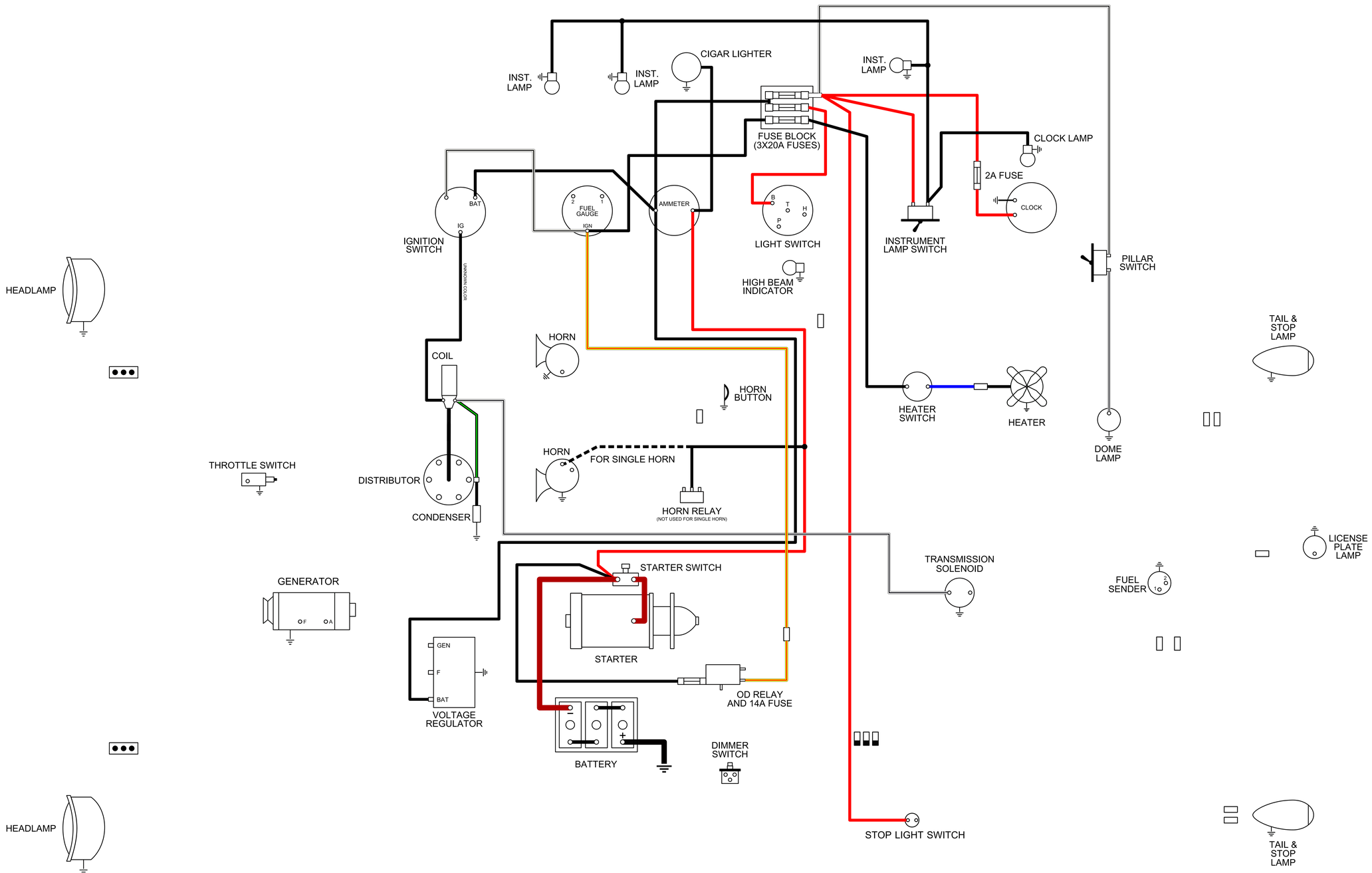

CINCO

1941-48 STUDEBAKER ALL TRUCKS

OVERDRIVE

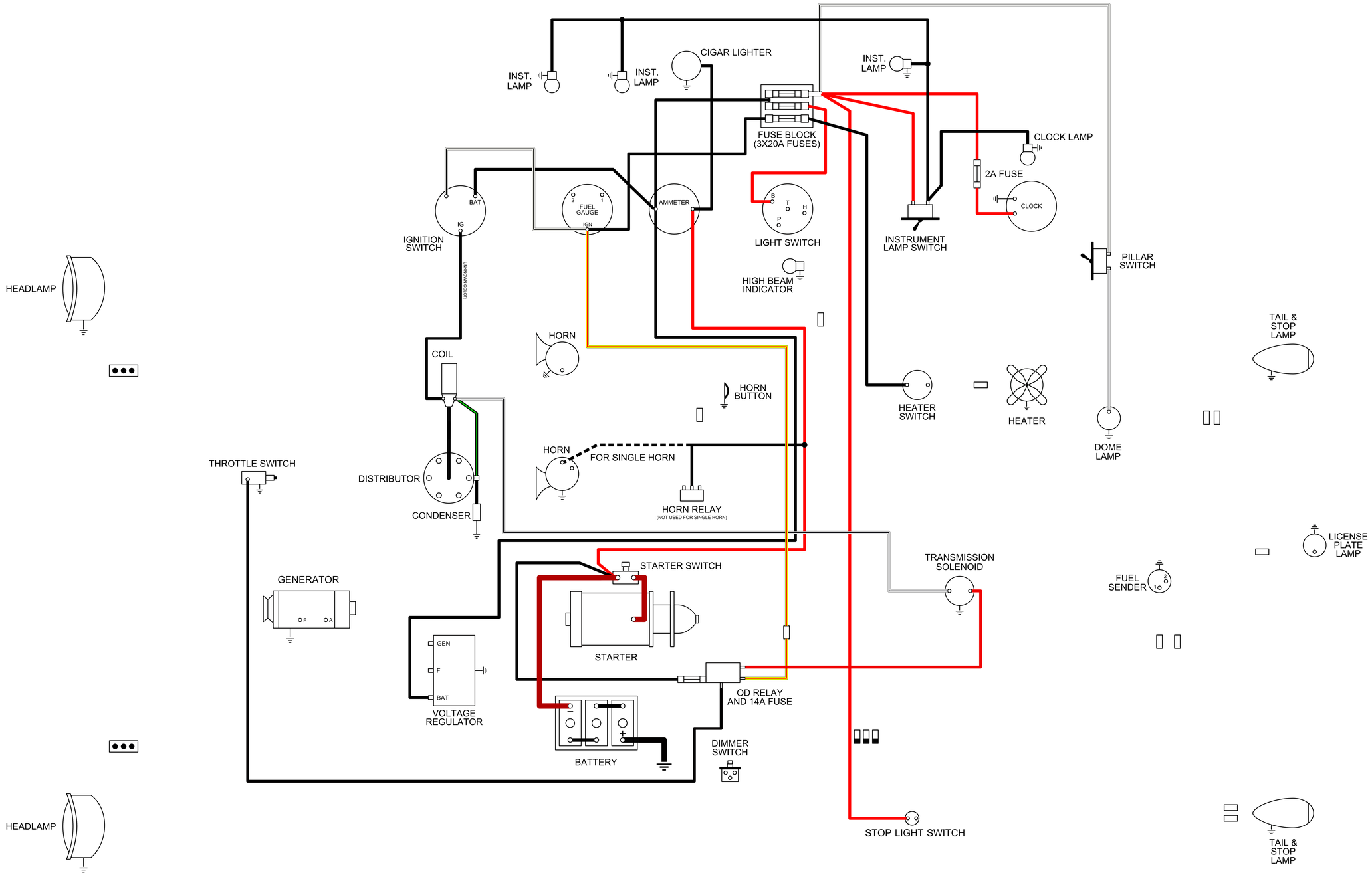

- BLACK
- WHITE
- RED
- BLUE
- GREEN
- LIGHT GREEN
- YELLOW
- TAN
- GRAY
- RED & BLACK
- RED & WHITE
- BLACK & WHITE
- BLACK & GREEN
- BLACK & BROWN
- BLACK & RED
- WHITE & BLACK
- WHITE & RED
- WHITE & GREEN
- WHITE & BROWN
- YELLOW & RED
- GREEN & BLACK

- CONNECTOR AS PART OF HARNESS
- LOOSE CONNECTOR
- FUSE
- GROUND CONNECTION
- RESISTOR

CINCO

1941-48 STUDEBAKER ALL TRUCKS

HORN

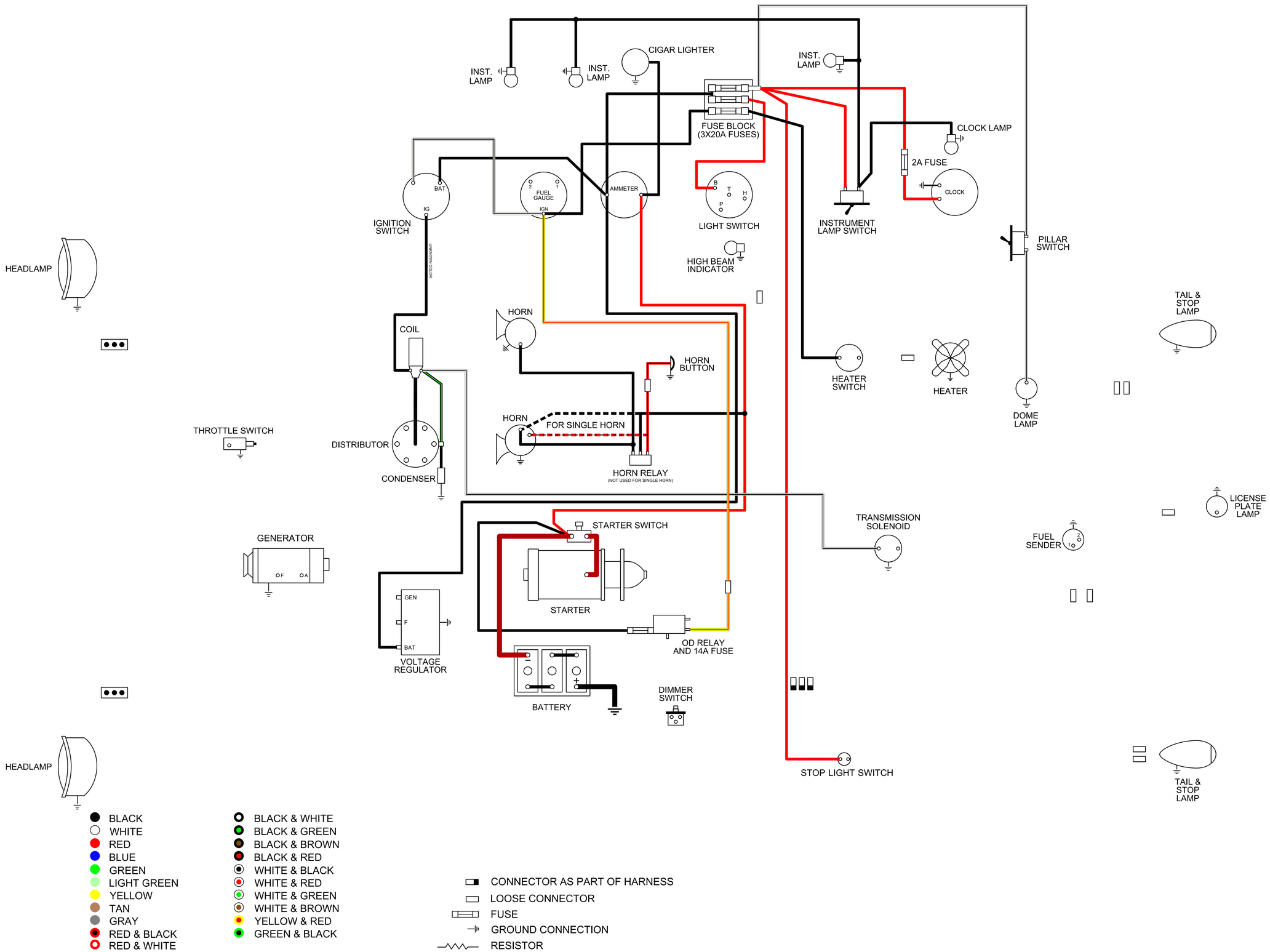

CINCO

1941-48 STUDEBAKER ALL TRUCKS

GAUGES

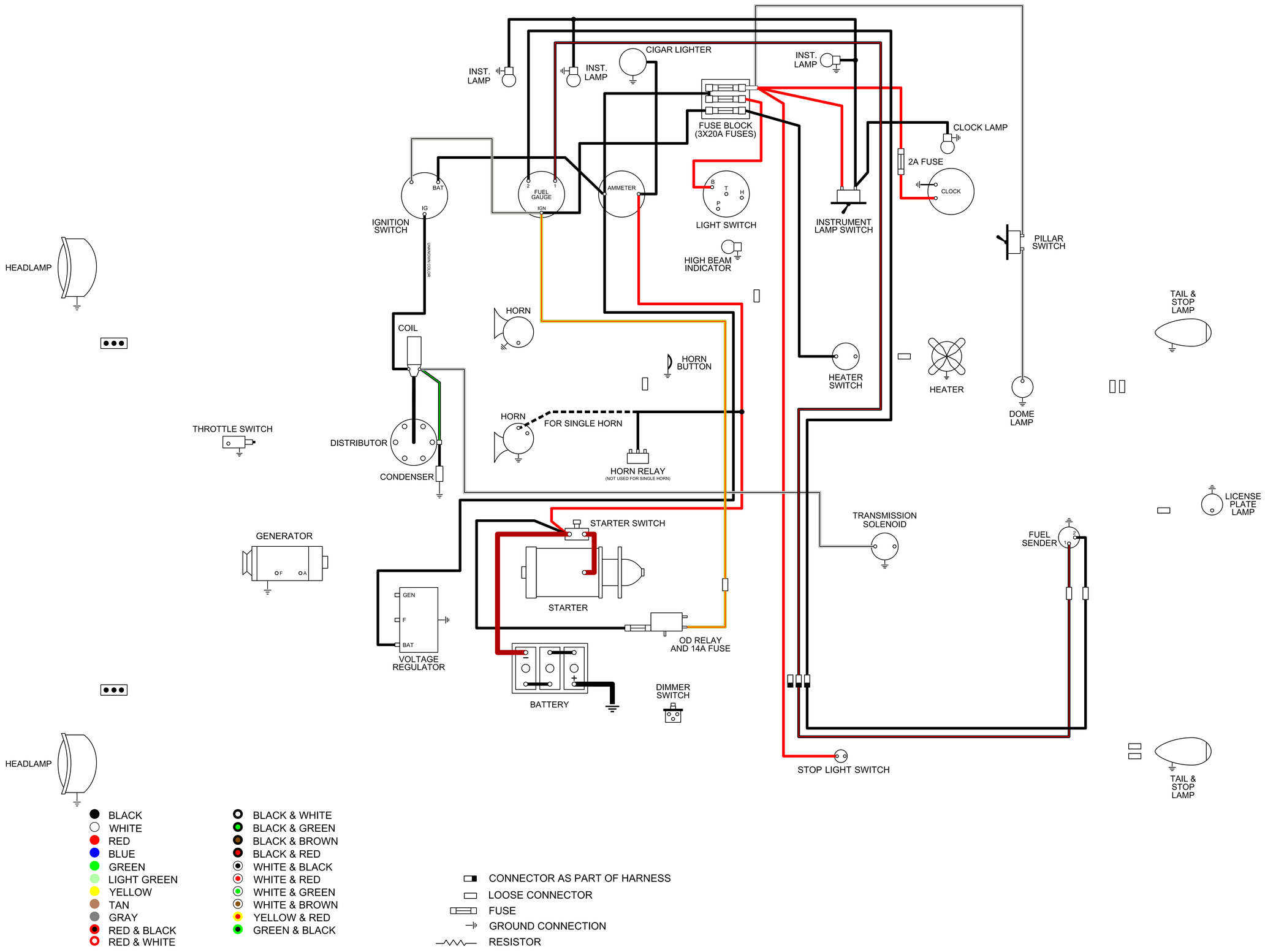

CINCO